STS15N4LLF5

N-channel 40 V, 0.00625 Ω, 15 A, SO-8 STripFET™ Power MOSFET

Features

Type	V_{DSS}	$R_{DS(on)}$ max.	I_D
STS15N4LLF5	40 V	< 0.0076 Ω	15 A

- Optimal $R_{DS(on)}$x Q_g trade-off @ 4.5 V
- Conduction losses reduced
- Switching losses reduced

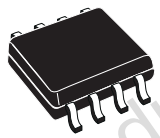

SO-8

Applications

- Switching application

Description

This STripFET™V Power MOSFET technology is among the latest improvements, which have been especially tailored to achieve very low on-state resistance providing also one of the best-in-class figure of merit (FOM).

Figure 1. Internal schematic diagram

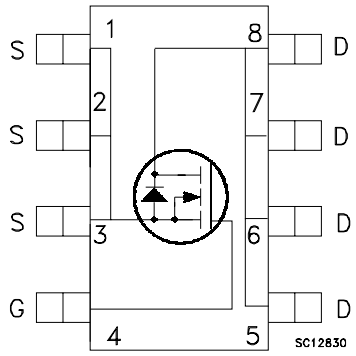

Table 1. Device summary

Order code	Marking	Package	Packaging
STS15N4LLF5	15C4L	SO-8	Tape and reel

Obsolete Product(s) - Obsolete Product(s)

Contents

1 Electrical ratings 3

2 Electrical characteristics 4

2.1 Electrical characteristics (curves) 6

3 Test circuits 8

4 Package mechanical data 9

5 Revision history 11

Obsolete Product(s) - Obsolete Product(s)

1 Electrical ratings

Table 2. Absolute maximim ratings

Symbol	Parameter	Value	Unit
V_{DS}	Drain-source voltage (V_{GS} = 0)	40	V
V_{GS}	Gate-source voltage	± 16	V
V_{GS} (1)	Gate- source voltage	±18	V
I_D	Drain current (continuous) at T_C = 25 °C	15	A
I_D	Drain current (continuous) at T_C = 100 °C	10	A
I_{DM} (2)	Drain current (pulsed)	63.6	A
P_{TOT}	Total dissipation at T_C = 25 °C	3	W
E_{AS} (3)	Single pulse avalanche energy	1090	mJ

1. Guaranteed for test time ≤ 15ms
2. Pulse width limited by Tjmax
3. Starting T_j = 25 °C, I_D = 7.5 A, V_{DD} = 25 V

Table 3. Thermal resistance

Symbol	Parameter	Value	Unit
$R_{thj-pcb}$ (1)	Thermal resistance junction-pcb max	47	°C/W
T_l	Maximum lead temperature for soldering	-55 to 150	°C
T_{stg}	Storage temperature	-55 to 150	°C

1. When mounted on FR-4 board with 1 inch^2 pad, 2oz of Cu and t < 10 sec

Obsolete Product(s) - Obsolete Product(s)

2 Electrical characteristics

(T_J = 25 °C unless otherwise specified)

Table 4. On/off states

Symbol	Parameter	Test conditions	Min.	Typ.	Max.	Unit
$V_{(BR)DSS}$	Drain-source breakdown voltage	I_D = 250 µA, V_{GS}= 0	40			V
I_{DSS}	Zero gate voltage drain current (V_{GS} = 0)	V_{DS} = max rating, V_{DS} =max rating @125°C			10 100	µA µA
I_{GSS}	Gate body leakage Current (V_{DS} = 0)	V_{GS} = ±16 V			±200	nA
$V_{GS(th)}$	Gate threshold voltage	V_{DS}= V_{GS}, I_D = 250 µA	1			V
$R_{DS(on)}$	Static drain-source on resistance	V_{GS}= 10 V, I_D= 7.5 A V_{GS}= 4.5 V, I_D= 7.5 A		0.00625 0.0076	0.0067 0.0083	Ω Ω

Table 5. Dynamic

Symbol	Parameter	Test conditions	Min.	Typ.	Max.	Unit
C_{iss} C_{oss} C_{rss}	Input capacitance Output capacitance Reverse transfer capacitance	V_{DS} = 25 V, f=1 MHz, V_{GS}= 0	-	1570 257 32	-	pF pF pF
Q_g Q_{gs} Q_{gd}	Total gate charge Gate-source charge Gate-drain charge	V_{DD} = 15 V, I_D = 18 A V_{GS} = 4.5 V *(see Figure 14)*	-	12.9 3.9 5.3	-	nC nC nC
R_G	Gate input resistance	f=1 MHz Gate DC Bias = 0 Test signal level = 20 mV open drain	-	1.5	-	Ω

Table 6. Switching times

Symbol	Parameter	Test conditions	Min.	Typ.	Max.	Unit
$t_{d(on)}$ t_r	Turn-on delay time Rise time	V_{DD} = 15 V, I_D = 9 A, R_G = 4.7 Ω, V_{GS} = 10 V *(see Figure 16)*	-	14 42	-	ns ns
$t_{d(off)}$ t_f	Turn-off delay time Fall time		-	37 5.2	-	ns ns

Obsolete Product(s) - Obsolete Product(s)

Table 7. Source drain diode

Symbol	Parameter	Test conditions	Min.	Typ.	Max.	Unit
I_{SD} I_{SDM} (1)	Source-drain current Source-drain current (pulsed)		-		18 72	A A
V_{SD} (2)	Forward on voltage	I_{SD} = 18 A, V_{GS} = 0	-		1.2	V
t_{rr} Q_{rr} I_{RRM}	Reverse recovery time Reverse recovery charge Reverse recovery current	I_{SD} = 18 A, V_{DD} = 25 V, di/dt = 100 A/µs, Tj = 150 °C *(see Figure 15)*	-	27.2 24.5 1.8		ns nC A

1. Pulse width limited by safe operating area
2. Pulsed: pulse duration = 300µs, duty cycle 1.5%

Obsolete Product(s) - Obsolete Product(s)

2.1 Electrical characteristics (curves)

Figure 2. Safe operating area

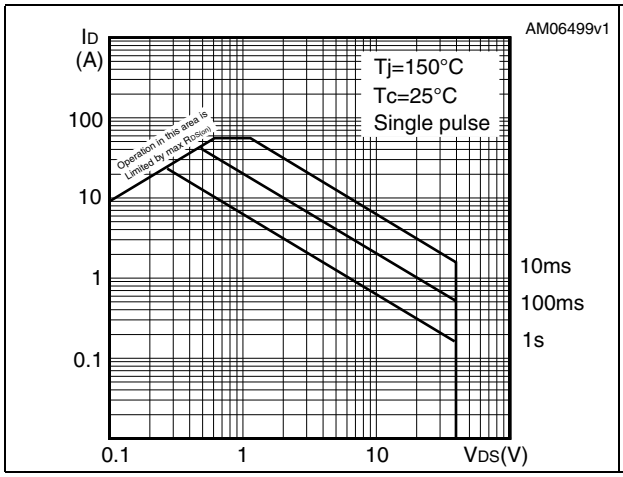

Figure 3. Thermal impedance

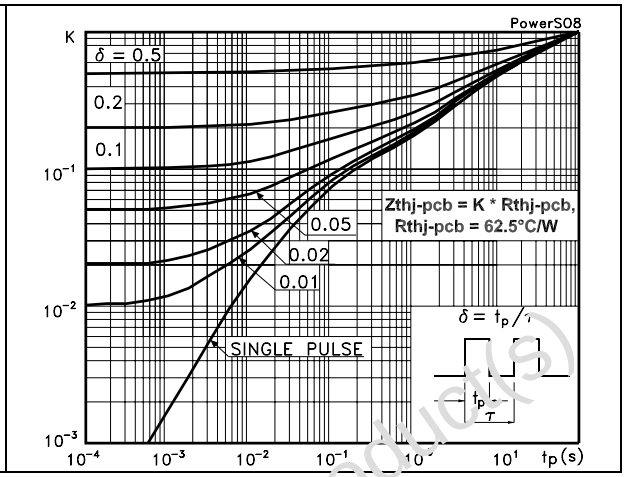

Figure 4. Output characterisics

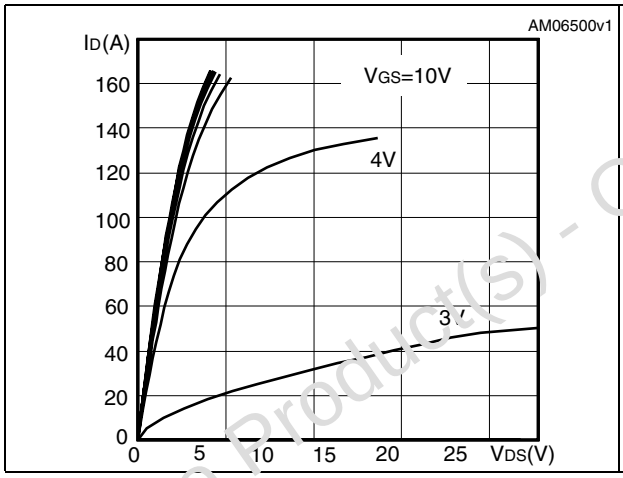

Figure 5. Transfer characteristics

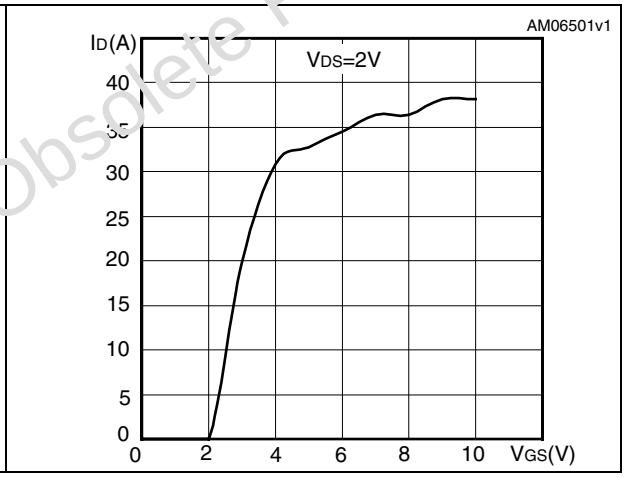

Figure 6. Normalized B_{VDSS} vs temperature

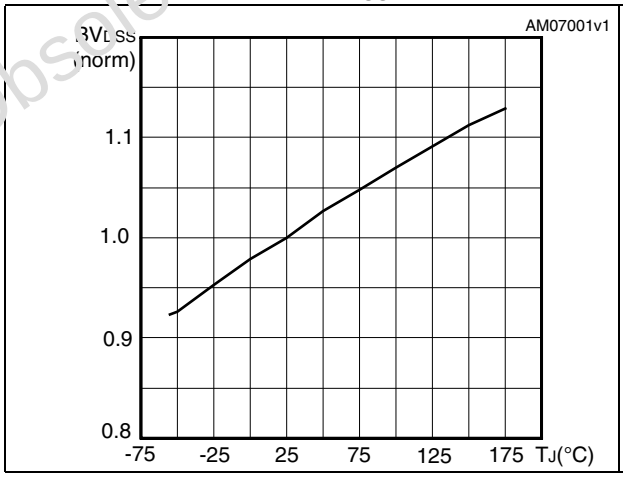

Figure 7. Static drain-source on resistance

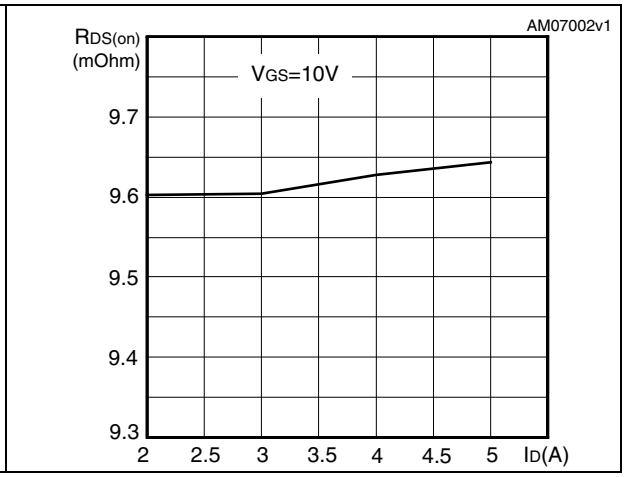

Obsolete Product(s) - Obsolete Product(s)

Figure 8. Gate charge vs gate-source voltage

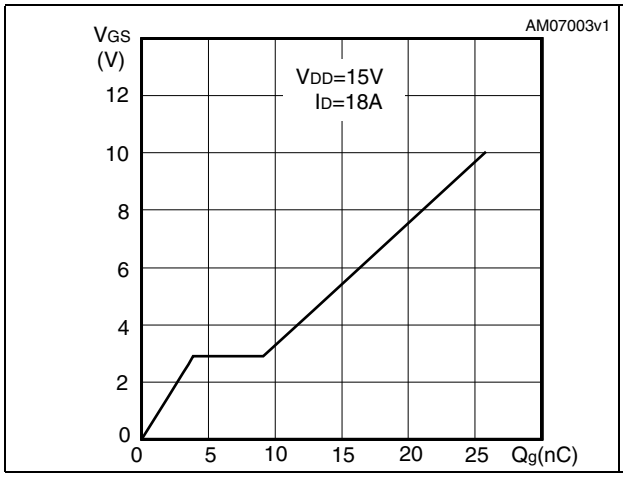

Figure 9. Capacitance variations

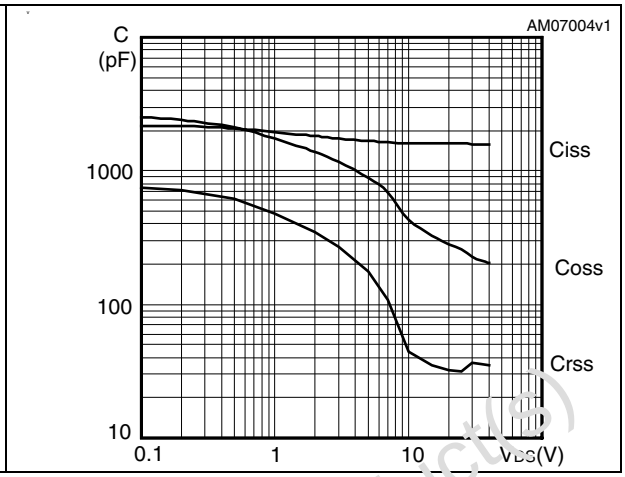

Figure 10. Normalized gate threshold voltage vs temperature

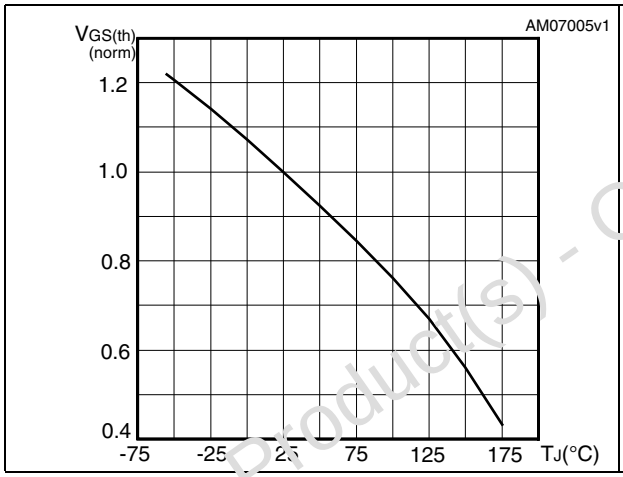

Figure 11. Normalized on resistance vs temperature

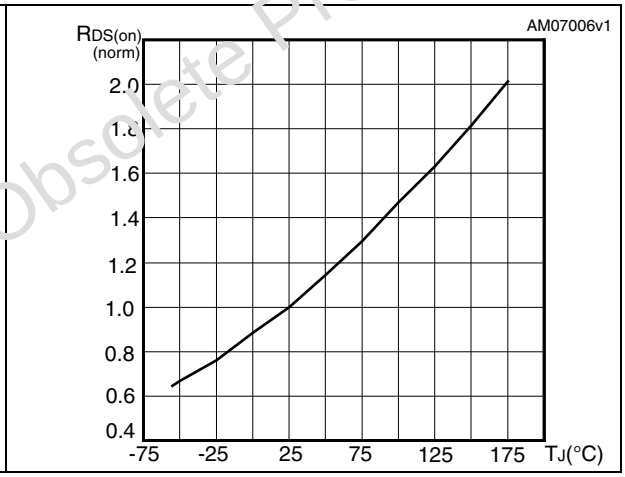

Figure 12. Source-drain diode forward characteristics

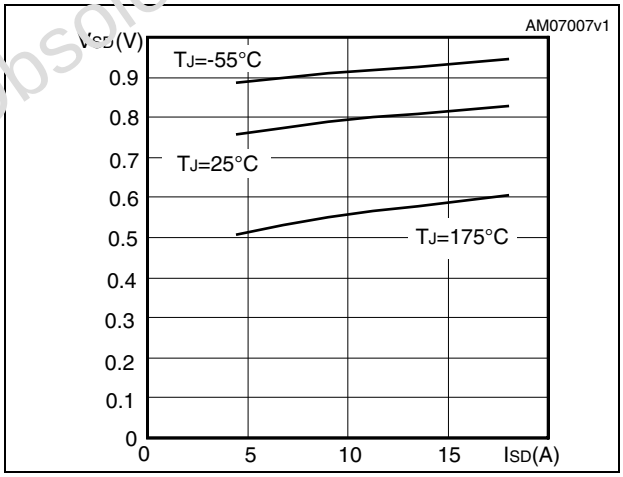

Obsolete Product(s) - Obsolete Product(s)

3 Test circuits

Figure 13. Switching times test circuit for resistive load

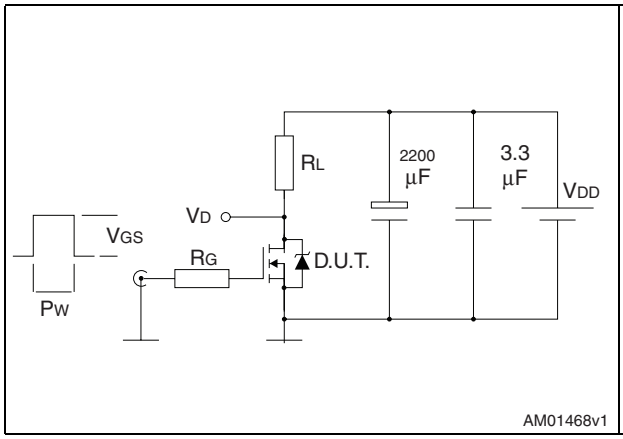

Figure 14. Gate charge test circuit

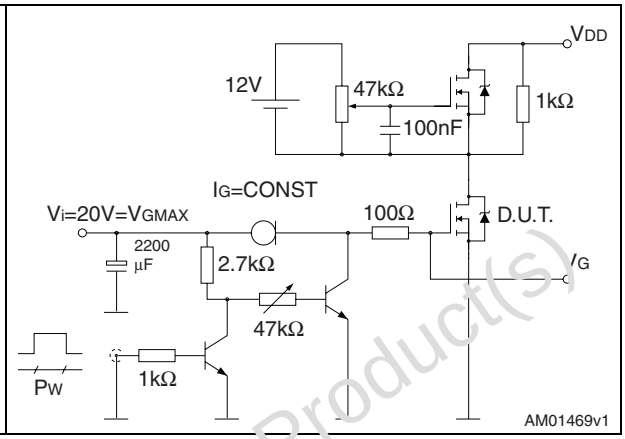

Figure 15. Test circuit for inductive load switching and diode recovery times

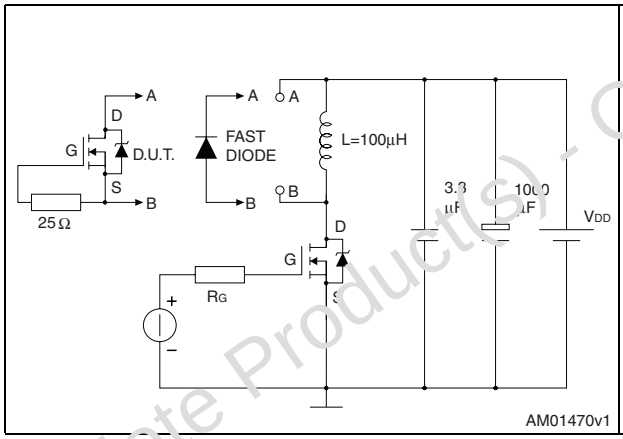

Figure 16. Unclamped inductive load test circuit

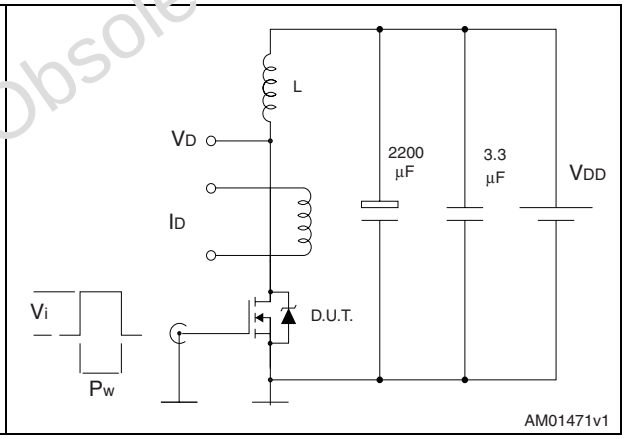

Figure 17. Unclamped inductive waveform

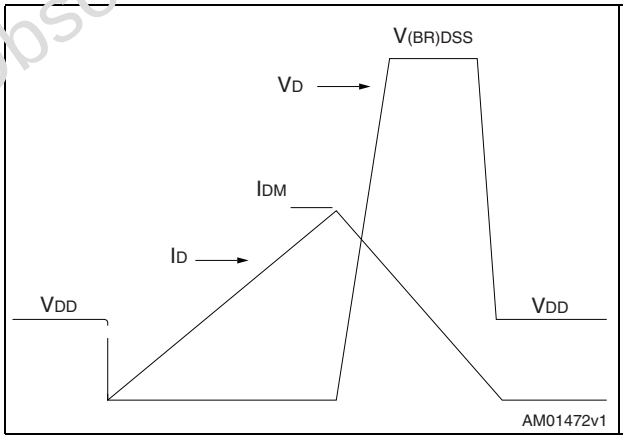

Figure 18. Switching time waveform

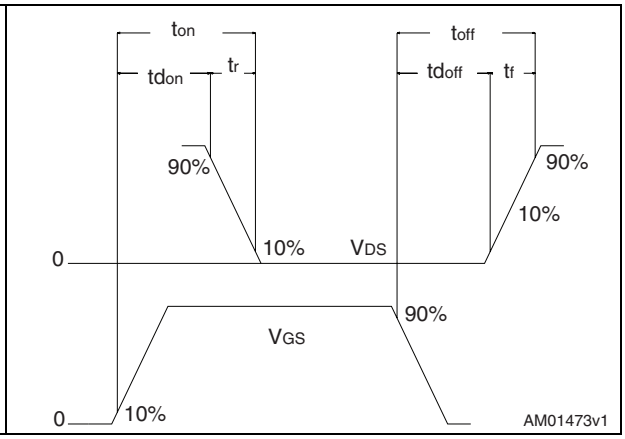

Obsolete Product(s) - Obsolete Product(s)

4 Package mechanical data

In order to meet environmental requirements, ST offers these devices in different grades of ECOPACK® packages, depending on their level of environmental compliance. ECOPACK® specifications, grade definitions and product status are available at: www.st.com. ECOPACK is an ST trademark.

Obsolete Product(s) - Obsolete Product(s)

Table 1. SO-8 mechanical data

Dim.	mm.			inch		
	Min	Typ	Max	Min	Typ	Max
A	1.35		1.75	0.053		0.069
A1	0.10		0.25	0.004		0.010
A2	1.10		1.65	0.043		0.065
B	0.33		0.51	0.013		0.020
C	0.19		0.25	0.007		0.010
D (1)	4.80		5.00	0.189		0.197
E	3.80		4.00	0.15		0.157
e		1.27			0.050	
H	5.80		6.20	0.228		0.244
h	0.25		0.50	0.010		0.020
L	0.40		1.27	0.016		0.050
k	0° (min.), 8° (max.)					
ddd			0.10			0.004

1. Dimensions D does not include mold flash, protrusions or gate burrs. Mold flash, potrusions or gate burrs shall not exceed 0.15mm (.006inch) in total (both side).

Figure 19. Package dimensions

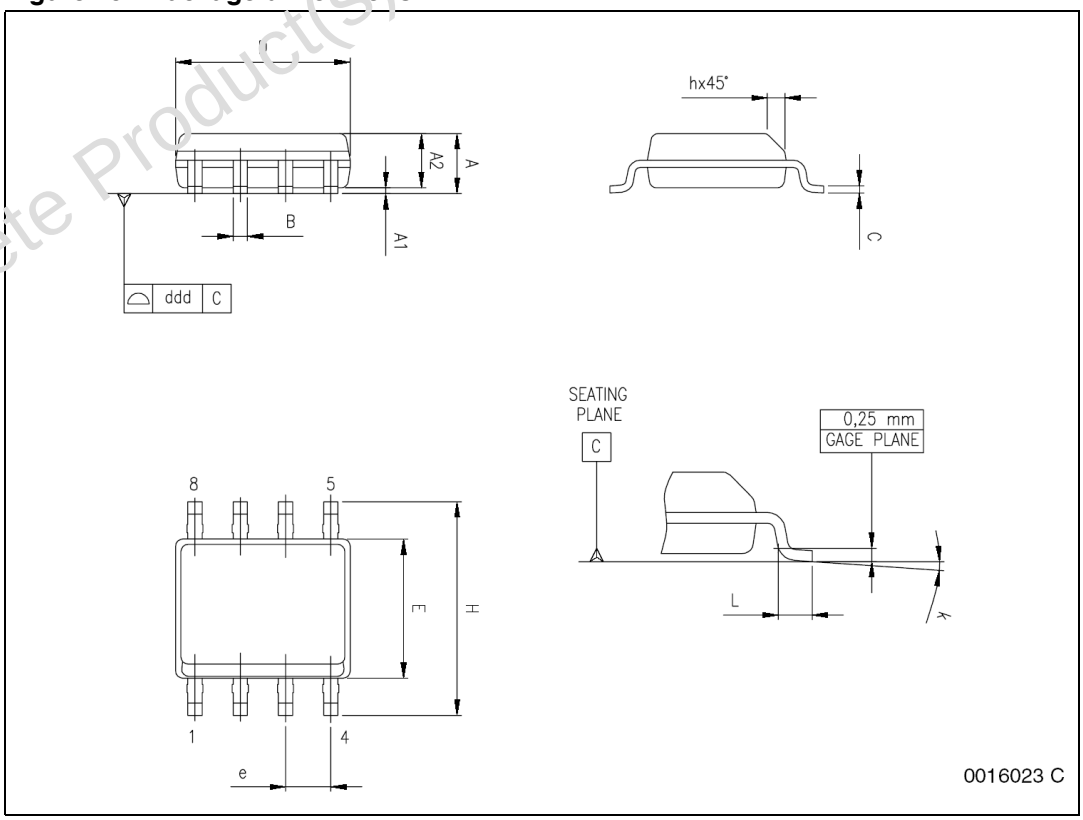

Obsolete Product(s) - Obsolete Product(s)

5 Revision history

Table 8. Revision history

Date	Revision	Changes
07-Apr-2010	1	First release

Obsolete Product(s) - Obsolete Product(s)

Please Read Carefully:

Information in this document is provided solely in connection with ST products. STMicroelectronics NV and its subsidiaries ("ST") reserve the right to make changes, corrections, modifications or improvements, to this document, and the products and services described herein at any time, without notice.

All ST products are sold pursuant to ST's terms and conditions of sale.

Purchasers are solely responsible for the choice, selection and use of the ST products and services described herein, and ST assumes no liability whatsoever relating to the choice, selection or use of the ST products and services described herein.

No license, express or implied, by estoppel or otherwise, to any intellectual property rights is granted under this document. If any part of this document refers to any third party products or services it shall not be deemed a license grant by ST for the use of such third party products or services, or any intellectual property contained therein or considered as a warranty covering the use in any manner whatsoever of such third party products or services or any intellectual property contained therein.

UNLESS OTHERWISE SET FORTH IN ST'S TERMS AND CONDITIONS OF SALE ST DISCLAIMS ANY EXPRESS OR IMPLIED WARRANTY WITH RESPECT TO THE USE AND/OR SALE OF ST PRODUCTS INCLUDING WITHOUT LIMITATION IMPLIED WARRANTIES OF MERCHANTABILITY, FITNESS FOR A PARTICULAR PURPOSE (AND THEIR EQUIVALENTS UNDER THE LAWS OF ANY JURISDICTION), OR INFRINGEMENT OF ANY PATENT, COPYRIGHT OR OTHER INTELLECTUAL PROPERTY RIGHT.

UNLESS EXPRESSLY APPROVED IN WRITING BY AN AUTHORIZED ST REPRESENTATIVE, ST PRODUCTS ARE NOT RECOMMENDED, AUTHORIZED OR WARRANTED FOR USE IN MILITARY, AIR CRAFT, SPACE, LIFE SAVING, OR LIFE SUSTAINING APPLICATIONS, NOR IN PRODUCTS OR SYSTEMS WHERE FAILURE OR MALFUNCTION MAY RESULT IN PERSONAL INJURY, DEATH, OR SEVERE PROPERTY OR ENVIRONMENTAL DAMAGE. ST PRODUCTS WHICH ARE NOT SPECIFIED AS "AUTOMOTIVE GRADE" MAY ONLY BE USED IN AUTOMOTIVE APPLICATIONS AT USER'S OWN RISK.

Resale of ST products with provisions different from the statements and/or technical features set forth in this document shall immediately void any warranty granted by ST for the ST product or service described herein and shall not create or extend in any manner whatsoever, any liability of ST.

ST and the ST logo are trademarks or registered trademarks of ST in various countries.

Information in this document supersedes and replaces all information previously supplied.

The ST logo is a registered trademark of STMicroelectronics. All other names are the property of their respective owners.

© 2010 STMicroelectronics - All rights reserved

STMicroelectronics group of companies

Australia - Belgium - Brazil - Canada - China - Czech Republic - Finland - France - Germany - Hong Kong - India - Israel - Italy - Japan - Malaysia - Malta - Morocco - Philippines - Singapore - Spain - Sweden - Switzerland - United Kingdom - United States of America

www.st.com

Obsolete Product(s) - Obsolete Product(s)